SHUR-TITE®
DRIVE SHANK
1 1/8" HEX

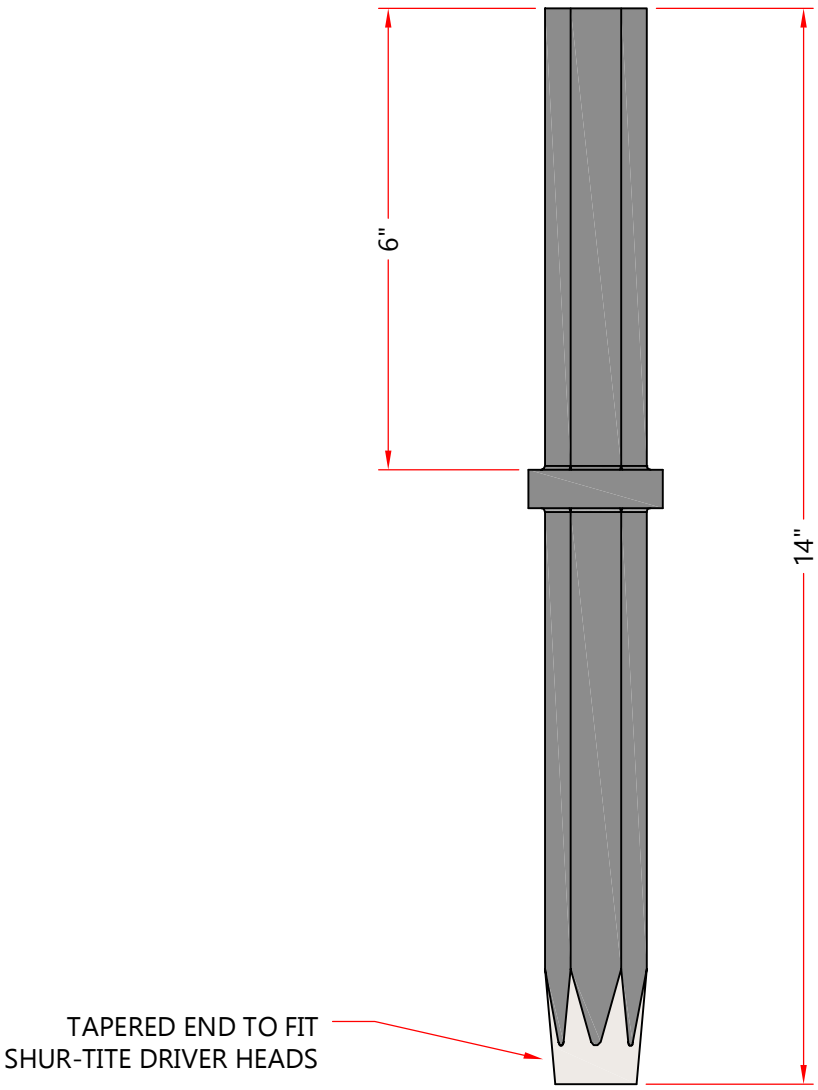

WEIGHT = 4.2 LBS.

SHUR-TITE\SLIDE HAMMER\DRIVE SHANK 072319.dwg, 7/23/2019 12:02:19 PM

SHUR-TITE® PRODUCTS P.O. BOX 2283 ROUND ROCK, TEXAS 78680 (512) 218-9500	TYPE: SHUR-TITE® DRIVE SHANK 1 1/8" HEX	DRAWN BY: PH	ITEM #: IDS 1.125X14	
		CHECKED BY: DWH	DATE: 07/23/19	SHEET: 1/1